sailing

2 hole deck mounted basin mixer excluding waste

The sailing range designed by Yabu Pushelberg clearly refers to the world of water and Lake Orta, inspired by the poetic reinterpretation of the clear lines and volumes of bollards, the most common form of boat cleats, which are essential elements for securing boats to docks by rope, which this range perfectly portrays and transforms into an elegant decorative detail for the bathroom.
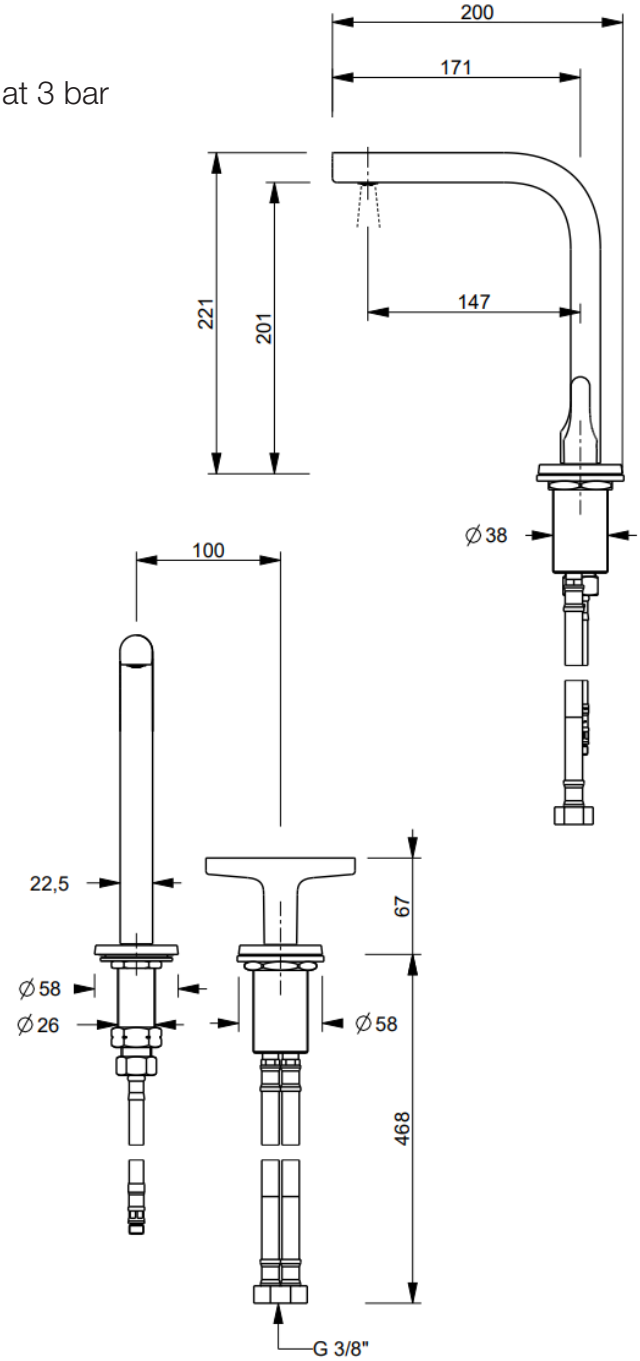
dimensions	15cm spout
material	solid brass
finish	matt gun metal PVD
min pressure	flow restrictor 5 l/min at 3 bar
waste	not included
additional	ceramic cartridges