axis 385mm x 1/2" shower arm & 200mm round shower rose

Our Axis range of brassware features linear cross handles and knurled detailing on the spouts. The scuffed brass living finish makes this range adaptable to both modern and classic bathroom styles.
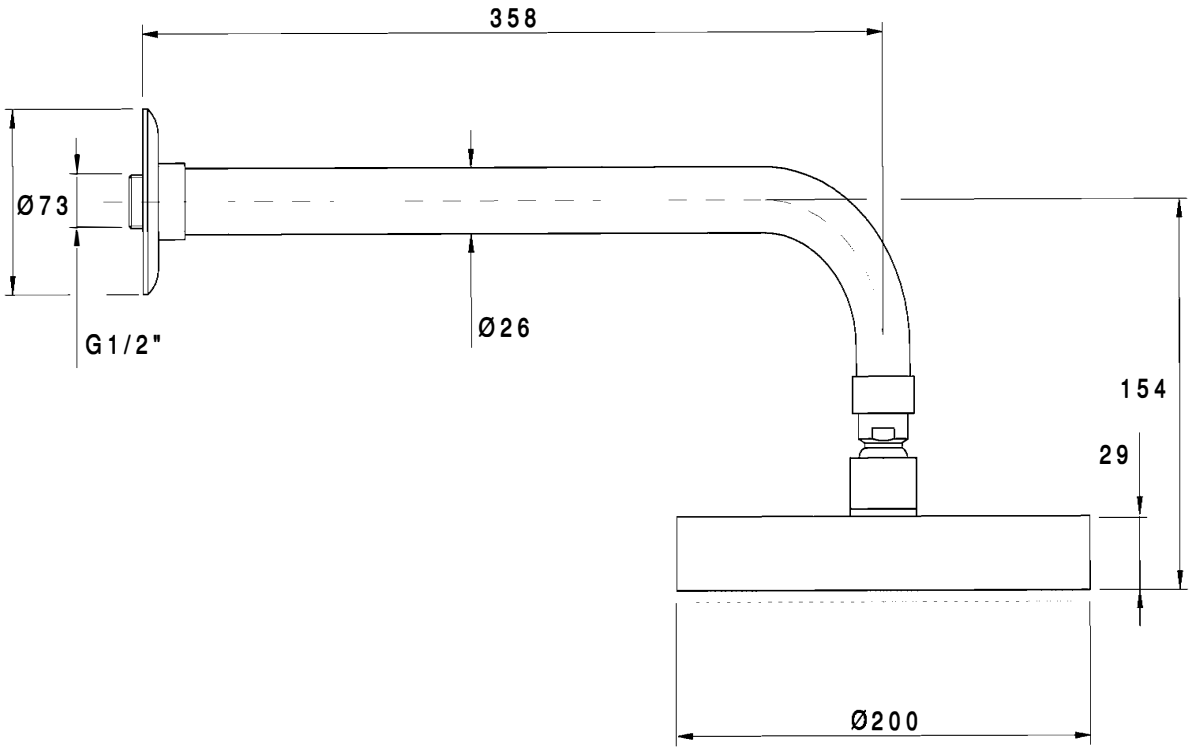
Material	solid brass
Finishes	scuffed brass - a living finish that can be polished to maintain its original look, or if left, will tarnish naturally and assume a characterful deep patina with age, bespoke finishes upon request.
Min. pressure	Minimum 1 bar, maximum 5 bar, recommended 3 bar