Astonian Original

2922 concealed dual shower valve

The Astonian Original range of high-quality British traditional brassware is available in an extensive range of finishes including Chrome, Nickel, Astonite, Polished and Brushed Brass and our exclusive living Aged Brass finish. With a choice of crosshead handles or ceramic levers and complete range covering basin, bath and shower fittings all manufactured, plated and polished in the UK. This well designed brassware features raw mechanical shapes with elegant period detailing. Our exclusive Aged Brass finish will create a bold statement and the living finish will evolve over time, adding character to the look.

Material	solid brass
Plated Finishes	chrome, nickel, astonite
Living Finishes	polished brass, brushed brass, aged brass - these finishes will evolve over time developing a characterful patina
Pressure	suitable for low and high pressure installations
Dual outlet	cross top controls temperature, china levers independently control on/off of two outlets

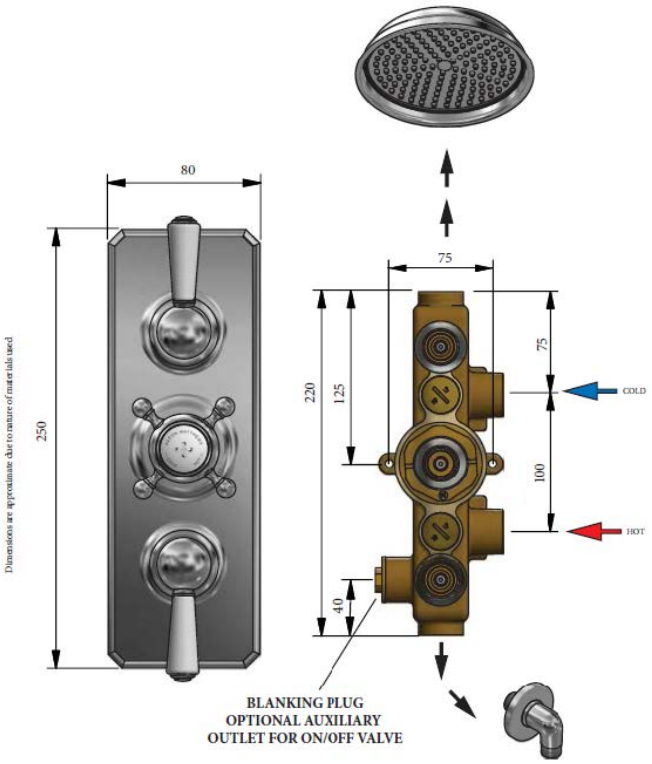

Flow rates

0.5 bar	14.90L/min
1.0 bar	21.24L/min
3.0 bar	37.65L/min

Max. pressure 5 bar - fit pressure reducing valves above 5 bar