venice 700mm basin and pedestal

A comprehensive, timeless collection of high quality ceramic pieces, accessories and furniture manufactured in England. Highly versatile and equally suited to a loft apartment or Victorian Rectory this classically styled range brings great looks to any bathroom or cloakroom.

Dimensions	700mm(w) x 530mm(p) x 850mm(h)
Material	ceramic
Finish	white
Tap holes	3th

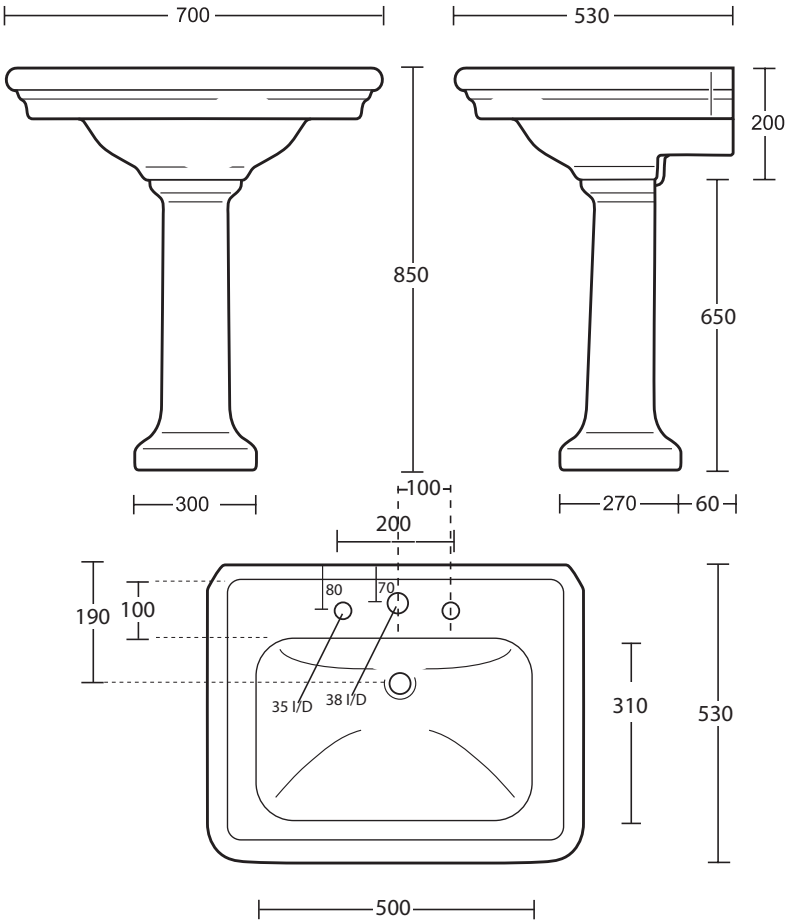

Internal bowl depth 125mm