epoca freestanding cast iron bath

The epitome of luxury, a freestanding bath is a perfect centre point in any bathroom, and a must for a truly period feel. As the leading supplier of cast iron baths in Britain, Aston Matthews knows this better than anyone. Supplied primed ready for finishing in any paint colour, our cast iron baths can also be married with modern taps to create a truly unique look. Following the design of our epoca bath but with larger, longer and deeper dimensions for a more comfortable bathing experience.

Dimensions	1770mm x 730mm x 770mm
Material	high enamelled cast iron
Finish	primed ready for painting
Weight	210kg
Capacity	250L

	A	B	C	D	E	F	G	H	I	J	KG PESO/WEIGHT	LT VOL
1770	1770	730	555	1690	635	700	486	485	770	365	210	250

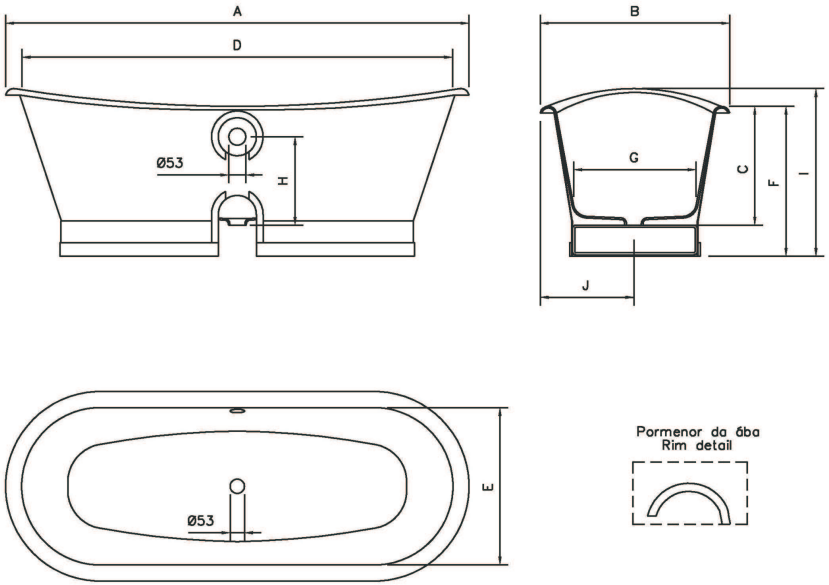

specifications / dimensions subject to manufacturing tolerances